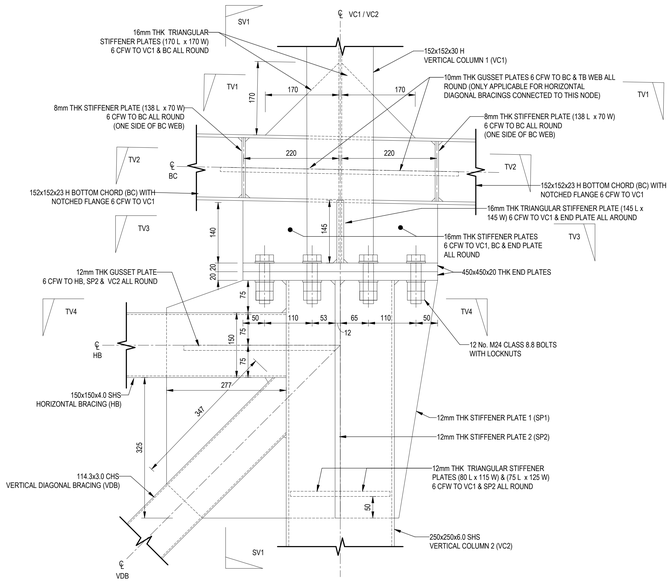

FRONT VIEW

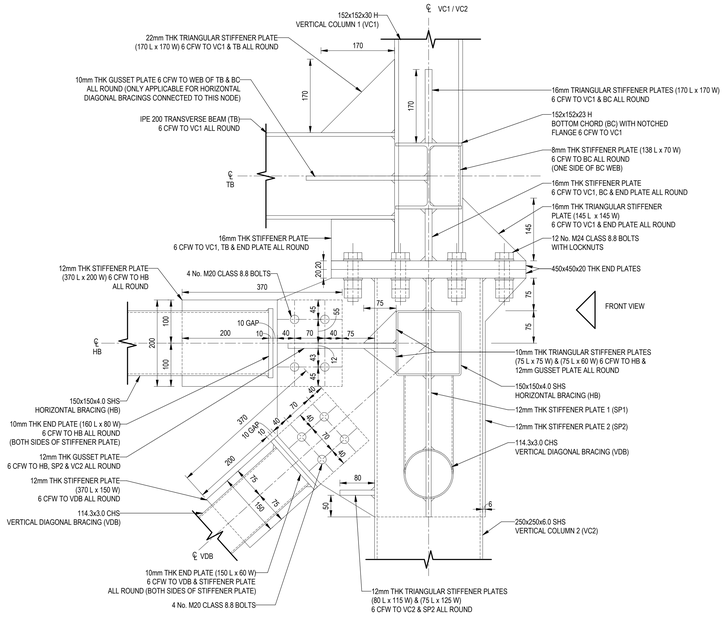

SIDE VIEW 1 (SV1)

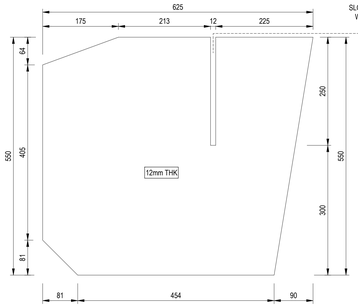

STIFFENER PLATE 1 (SP1)

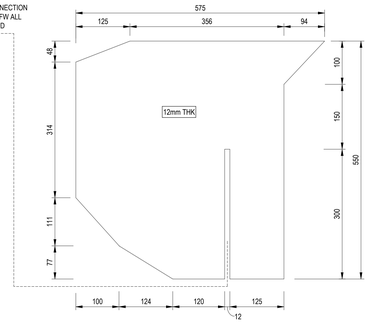

STIFFENER PLATE 2 (SP2)

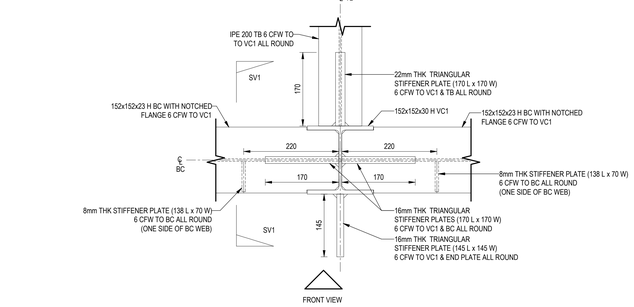

TOP VIEW 1 (TV1)

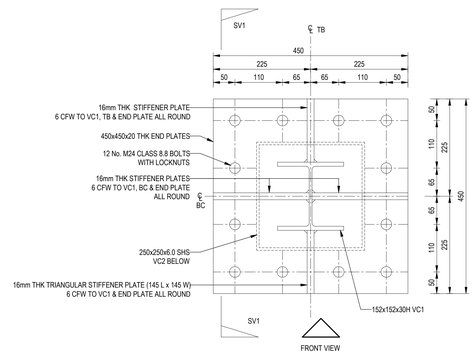

TOP VIEW 3 (TV3)

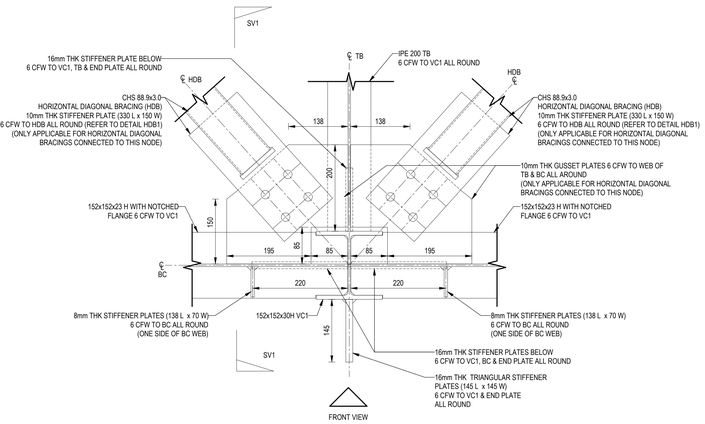

TOP VIEW 2 (TV2)

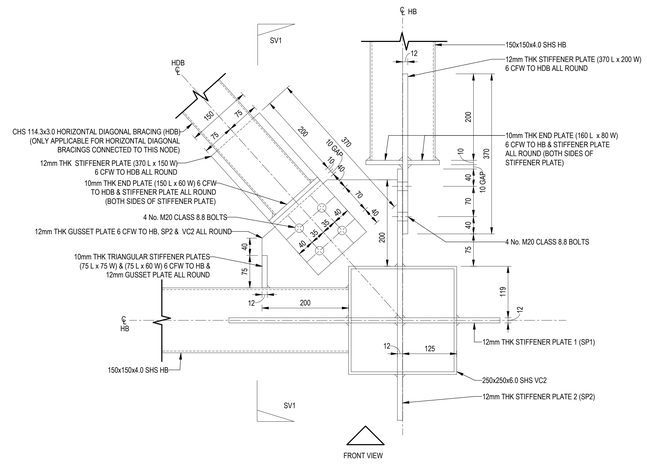

TOP VIEW 4 (TV4)

CHORD CONNECTION TYPE 7 (CC7) DETAIL

1 : 5

GENERAL NOTES:

- DO NOT SCALE DRAWINGS. ONLY DIMENSIONS PROVIDED ON DRAWINGS TO BE USED.
- ALL DIMENSIONS ARE IN MILLIMETERS UNO.
- ALL DIMENSIONS SHALL BE VERIFIED ON SITE BEFORE PROCEEDING WITH THE WORK. RELEVANT PARTIES SHALL BE NOTIFIED IN WRITING OF ANY DISCREPANCIES.
- THIS DRAWING MUST BE READ IN CONJUNCTION WITH ALL RELEVANT CONTRACTS, SPECIFICATIONS, REPORTS AND DRAWINGS.
- FOR GENERAL NOTES, REFER TO DRAWINGS: 1002970-ZUT-DRG-1X-GF-ST-0150 TO -0152
- ALL SETTING OUT OF VERTICAL ELEMENTS AND FOUNDATIONS TO CENTRE LINES UNO.
- ALL SETTING OUT OF HORIZONTAL ELEMENTS ARE TO EDGES UNO.
- SETTING OUT ONLY PROVIDED TO VERTICAL ELEMENTS NOT CENTERED ON GRIDLINES UNO.
- FOR SETTING OUT NOT INDICATED ON STRUCTURAL DRAWINGS, REFER TO ARCHITECTURAL DOCUMENTATION.
- THE SAFE BEARING CAPACITY OF THE GROUND FOR ALL FOUNDATIONS IS TO BE VERIFIED BY DCP TESTS IN ACCORDANCE WITH THE NUMBER AND PROCEDURE SPECIFIED IN THE GENERAL NOTES.

PRELIMINARY

NOT FOR CONSTRUCTION

DISCLAIMER

IF CONSTRUCTION DRAWINGS ARE ISSUED UNSIGNED, THE MASTER WITH THE ORIGINAL SIGNATURE OF APPROVAL WILL BE HELD AT THE ZUTARI OFFICE OF THE APPROVER

REVISIONS

NO.	DATE	DESCRIPTION	APPROVED
A	2025-09-12	ISSUED FOR INFORMATION	W. JACKSON
0	2024-11-29	ISSUED FOR CONSTRUCTION	W. JACKSON

© COPYRIGHT: THIS DRAWING MAY NOT BE REPRODUCED OR TRANSMITTED IN ANY FORM OR BY ANY MEANS IN PART OR IN WHOLE WITHOUT THE PERMISSION OF THE DESIGNER.

ALL WORK TO BE CARRIED OUT IN ACCORDANCE WITH SANS CODE 10400. N.B.R & LOCAL AUTHORITY BYLAWS.

USE FIGURED DIMENSIONS ONLY - DO NOT SCALE. ANY CONSTRUCTION FROM THESE DRAWINGS IS AT OWNER'S RISK.

ALL BOUNDARIES, DIMENSIONS AND LEVELS ARE TO BE CHECKED ON SITE BEFORE CONSTRUCTION AND ANY DISCREPANCIES ARE TO BE REPORTED TO THE ARCHITECT.

PARTIAL SERVICE: ANY DISCREPANCIES WITH SITE OR OTHER INFORMATION IS TO BE ADVISED TO THE ARCHITECT AND DIRECTION OR APPROVAL IS TO BE SOUGHT BEFORE IMPLEMENTATION OF THE DRAWING.

FOR THE PURPOSE OF COORDINATION, ALL RELEVANT PARTIES MUST CHECK THIS INFORMATION PRIOR TO IMPLEMENTATION AND REPORT ANY DISCREPANCIES TO THE ARCHITECT.

Engineer: W. JACKSON REG no: 20150154

Signature: Date:

DBSA DEVELOPMENT BANK OF SOUTHERN AFRICA

Building Africa's Prosperity

Client: **Government Printing Works**

Signature: Date:

government printing

Department: Government Printing Works
REPUBLIC OF SOUTH AFRICA

PROJECT:
CONSTRUCTION OF NEW CARPORTS, GUARDHOUSE AND BOUNDARY WALL FOR GOVERNMENT PRINTING WORKS ADMINISTRATIVE HEADQUARTERS

PROJECT:

DRAWING TITLE:
STRUCTURAL SERVICES
LINK BRIDGE
CONNECTIONS- SHEET 2

Building Classification:		Climatic Zone:
G1_Offices		Zone 2:
Paper Size: A0		Scale: AS INDICATED
Drawn: J.P. DELPORT	Checked: J. HUANG	Date: 2025-09-12

PROJECT No: GPW/HS/2017/02

DRAWING No: 1002970-ZUT-DRG-1X-GF-ST-0211

REVISION: A

Plot Date: 2025/09/05 07:25:13 Office: Filename: Autodesk Docs://1002970_DBSA Tsw18 GPW_2023/1002970-ZUT-MDM-A1-ZZ-S1-00000.rvt